Model
FRK8.5G

Sales code:
106G5753

Compressor Data

Refrigerant(s)	**R134a / R513A**
Refr. charge - tech. limit	**700g / 24.69oz**
Weight	**9.50 kg / 20.94lbs**
Displacement	**6.60 cm3 / 0.40cu.in**
Compressors on pallet	**100**



General – Configurations With FRK8.5G

–	**Conf. 1**	**Conf. 2**
Motor configuration	CSIR	CSIR
Power supply (nominal)	220-240 V/50 Hz	208-230 V/60 Hz
Number of phases	1	1
Voltage range	187-254 V	198-253 V
Approvals	VDE, CB, UL, CCC	VDE, CB, UL, CCC
Starting torque	HST	HST
Refrigerant	R134a	R134a
Application	LBP+MBP+HBP	LBP+MBP
Hot gas defrost	OK	OK
Long interval pull down	OK	OK

Application Notes

- Provision for PE Grounding is located at the PE Stamp on the compressor
- Suctiongas connector and Process connector can be switched (minor loss of cooling capacity)
- Very good robustness against liquid intake.
- Ice-cube maker optimization - indirect suction intake.
- Special design for high refrigerant charge

Model
FRK8.5G

Sales code:
106G5753

Compressor Design

Oil type	**POE**	Winding resistance main	**8.4 Ohm**
Oil viscosity	**19,2cSt**	Winding resistance aux	**11.9 Ohm**
Oil quantity	**240 / 8.12fl.oz**	Max. winding temp.	**125 °C**
Free gas volume comp.	**1,510 cm3 / 51.06fl.oz**	Max. discharge temp.	**130°C / 266°F**
Motor protection	**external**		

Compressor Dimensions

Housing

A Height	**182mm / 7.17in**
B Height	**175mm / 6.89in**
C Length shell	**198mm / 7.80in**
D Length w. cover	**238mm / 9.37in**
E Width	**160mm / 6.30in**

Find 3D Model here

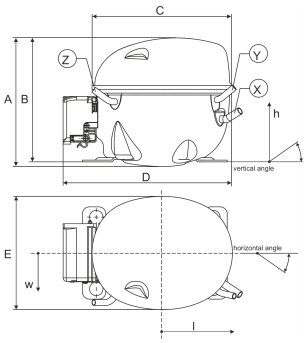

Connectors	Suction X	Discharge Y	Process Z
Diameter [mm]	øi 8.11–8.29 / 0.32–0.33in	øi 6.11–6.29 / 0.24–0.25in	øi 6.11–6.29 / 0.24–0.25in
Material	CU	CU	CU
Horizontal angle ±2°	35°	13°	0°
Vertical angle ±2°	30°	40°	145°
Position l/h/w [mm]	119/73/59 / 4.69/2.87/2.32in	117/107/66 / 4.61/4.21/2.60in	-88/101/71 / -3.46/3.98/2.80in
Straight tube l. [mm]	13.5 / 0.53in	13.5 / 0.53in	13.5 / 0.53in

Mounting Accessories

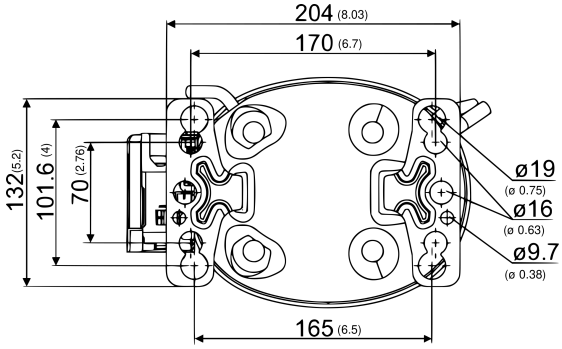

Dimensions in mm [in]

Bolt joint

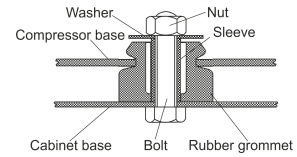

Snap-on

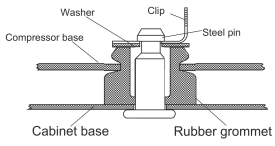

	one comp.	multi pack
Bolt joint | M6 | ø16mm	118-1917	118-1918
Bolt joint | ø1/4" | ø16mm	118-1946	–
Bolt joint | ø1/4" | ø19mm	118-1949	–
Snap-on | ø7,3 | ø16mm	118-1947	118-1919

Model
FRK8.5G Configuration 1

Sales code:
106G5753

Configuration

Motor configuration	**CSIR**
Power supply (nominal)	**220-240 V/50 Hz 1~**
Refrigerant	**R134a**
Application	**LBP+MBP+HBP**
Voltage range	**187-254 V**
Starting torque	**HST**
Approvals	**VDE, CB, UL, CCC**
Starting device type	**relay**
Run capacitor	**-/-**
Start capacitor	**80 µF**
LRA (locked rotor amps / 4s/ U(N))	**13.4 A**
RLA (rated load amps / 1s/ U(N))	**1.8 A**
Cut in current (U(N))	**12.3 A**

Ambient/ machine room temperatures minimum /maximum
Ambient temperature range: 10 - 43°C / 50 - 109°F
Machine room temp. compressor: 10 - 48°C / 50 - 118°F

System Cooling
fan 3m/s

Electrical Accessories / Wiring Diagram

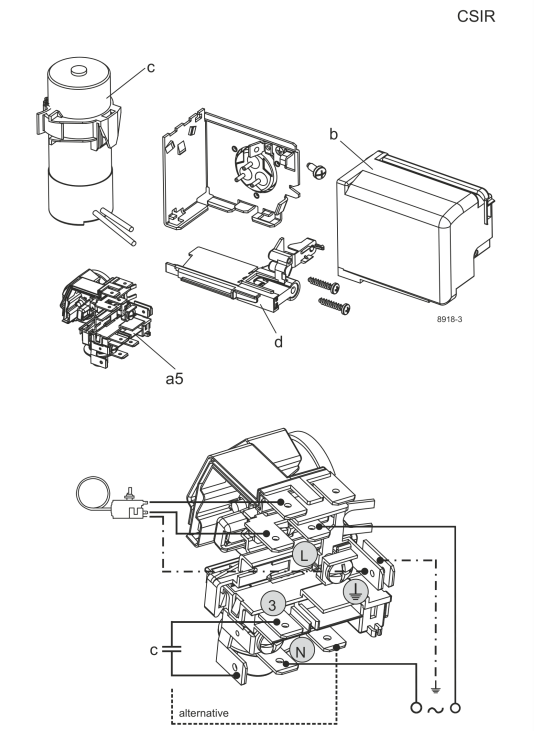

View full size

Components
a5 current relay (T0377/L6-S1) 117U7071
c start capacitor (80µF, 6.3mm) 117U5001
b, d cover + clamp + screws (5VA-compl.) 103N0600

Alternative components
b, d 100x cover + clamp + screws (5VA) 103N2060
b, d cover + clamp + screws (5VA) in bag 103N1060

Operation Pressure Range

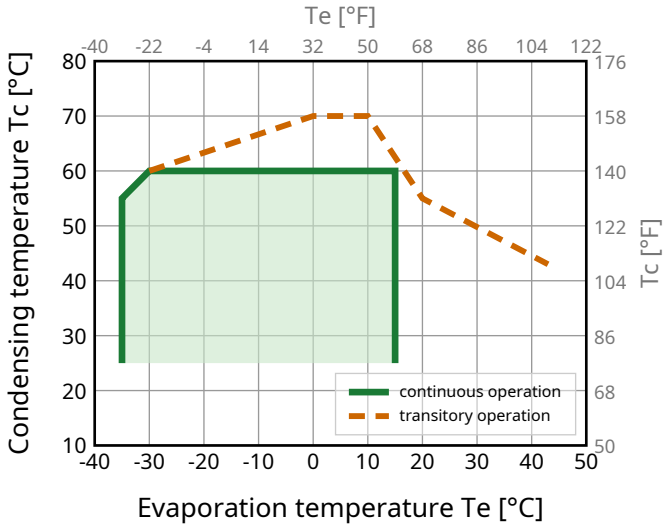

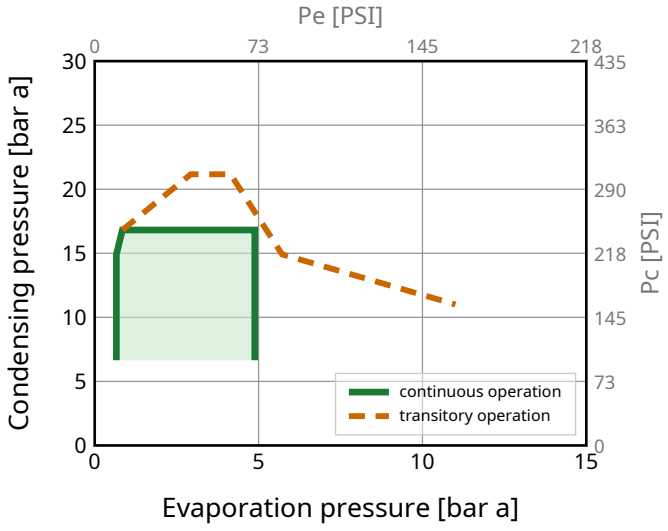

Model Sales code:

FRK8.5G Configuration 1 **106G5753**

Standard Conditions

R134a, 220 V/50 Hz, CSIR, fan 3m/s

pe	pc	RGT	Tliq	Cooling capacity			COP	EER	P	I	ṁ	
[°C] [°F]	[°C] [°F]	[°C] [°F]	[°C] [°F]	[W]	[Btu/h]	[kcal/h]	[W/W]	[Btu/Wh]	[W]	[A]	[kg/h]	
-23.3 -10	54.4 129.9	32.2 90	32.2 90	**185**	632	159	**1.23**	4.19	151	1.30	3.59	**ASHRAE LBP**
-6.7 20	54.4 129.9	35 95	46.1 115	**392**	1338	337	**1.78**	6.07	220	1.54	8.54	**ASHRAE MBP**
7.2 45	54.4 129.9	35 95	46.1 115	**700**	2390	602	**2.47**	8.44	283	1.79	15.51	**ASHRAE HBP**
-35 -31	40 104	20 68	40 104	**98**	333	84	**0.89**	3.03	110	1.21	2.13	**EN12900 LBP**
-10 14	45 113	20 68	45 113	**341**	1162	293	**1.81**	6.17	188	1.42	7.94	**EN12900 MBP**
5 41	50 122	20 68	50 122	**600**	2048	516	**2.31**	7.87	260	1.69	15.05	**EN12900 HBP**

Performance Tables

R134a, 220 V/50 Hz, CSIR, fan 3m/s

pc= 45/113 | RGT= 32/89.6 | Tliq= 45/113 | °C/°F

pe		Cooling capacity			COP	EER	P	I	ṁ
[°C]	[°F]	[W]	[Btu/h]	[kcal/h]	[W/W]	[Btu/Wh]	[W]	[A]	[kg/h]
-35	-31	**92**	313	79	**0.82**	2.79	112	1.21	1.98
-30	-22	**120**	411	104	**0.97**	3.32	124	1.23	2.60
-20	-4	**212**	722	182	**1.38**	4.71	154	1.31	4.59
-10	14	**353**	1204	303	**1.87**	6.39	188	1.42	7.71
0	32	**550**	1878	473	**2.43**	8.30	226	1.56	12.14
10	50	**810**	2765	697	**3.07**	10.47	264	1.71	18.14
15	59	**966**	3296	831	**3.42**	11.68	282	1.78	21.82

pc= 55/131 | RGT= 32/89.6 | Tliq= 55/131 | °C/°F

-35	-31	**74**	254	64	**0.67**	2.28	111	1.21	1.76
-30	-22	**100**	343	86	**0.79**	2.70	127	1.24	2.39
-20	-4	**181**	617	155	**1.10**	3.76	164	1.34	4.32
-10	14	**304**	1036	261	**1.47**	5.01	207	1.49	7.32
0	32	**475**	1620	408	**1.88**	6.42	252	1.66	11.58
10	50	**701**	2392	603	**2.36**	8.04	298	1.85	17.37
15	59	**837**	2856	720	**2.62**	8.94	319	1.95	20.95

Model
FRK8.5G Configuration 2

Sales code:
106G5753

Configuration

Motor configuration	**CSIR**
Power supply (nominal)	**208-230 V/60 Hz 1~**
Refrigerant	**R134a**
Application	**LBP+MBP**
Voltage range	**198-253 V**
Starting torque	**HST**
Approvals	**VDE, CB, UL, CCC**
Starting device type	**relay**
Run capacitor	**-/-**
Start capacitor	**80 µF**
LRA (locked rotor amps / 4s/ U(N))	**13.4 A**
RLA (rated load amps / 1s/ U(N))	**1.8 A**
Cut in current (U(N))	**12.3 A**

Ambient/ machine room temperatures minimum /maximum
Ambient temperature range: 10 - 43°C / 50 - 109°F
Machine room temp. compressor: 10 - 48°C / 50 - 118°F

System Cooling
fan 3m/s

Electrical Accessories / Wiring Diagram

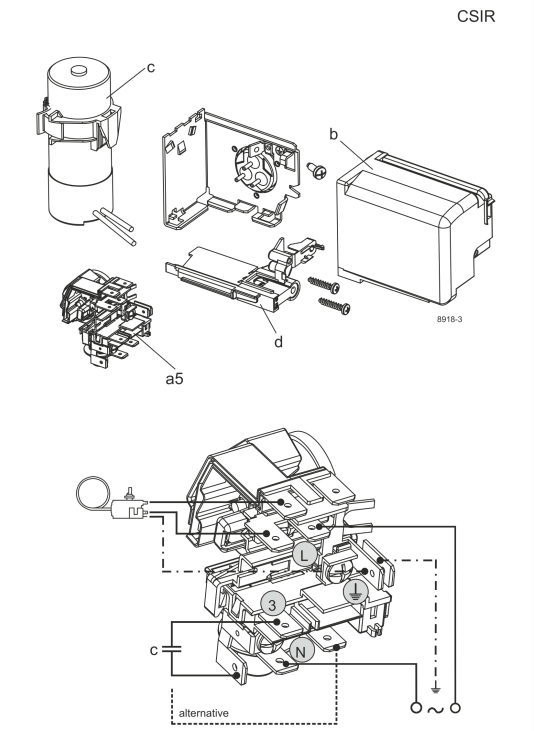

View full size

Components
a5 current relay (T0377/L6-S1) 117U7071
c start capacitor (80µF, 6.3mm) 117U5001
b, d cover + clamp + screws (5VA-compl.) 103N0600

Alternative components
b, d 100x cover + clamp + screws (5VA) 103N2060
b, d cover + clamp + screws (5VA) in bag 103N1060

Operation Pressure Range

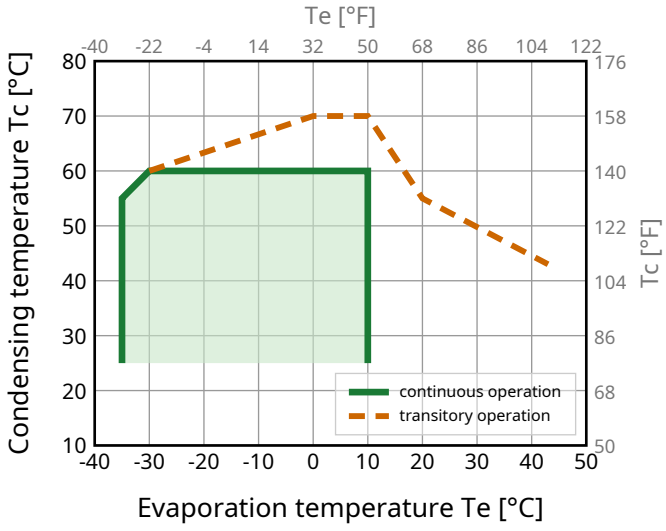

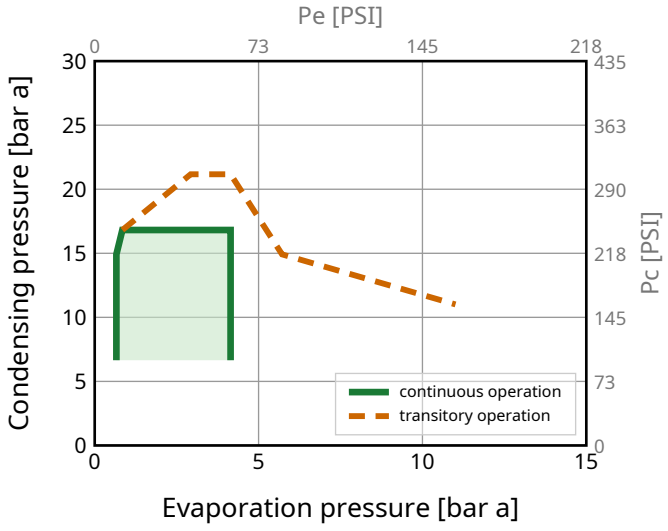

Model Sales code:

FRK8.5G Configuration 2 **106G5753**

Standard Conditions

R134a, 230 V/60 Hz, CSIR, fan 3m/s

pe	pc	RGT	Tliq	Cooling capacity			COP	EER	P	I	ṁ	
[°C] [°F]	[°C] [°F]	[°C] [°F]	[°C] [°F]	[W]	[Btu/h]	[kcal/h]	[W/W]	[Btu/Wh]	[W]	[A]	[kg/h]	
-23.3 -10	54.4 129.9	32.2 90	32.2 90	**224**	766	193	**1.32**	4.50	170	1.25	4.35	**ASHRAE LBP**
-6.7 20	54.4 129.9	35 95	46.1 115	**464**	1582	399	**1.83**	6.25	253	1.51	10.10	**ASHRAE MBP**
7.2 45	54.4 129.9	35 95	46.1 115	**820**	2800	706	**2.52**	8.58	326	1.78	18.16	**ASHRAE HBP**
-35 -31	40 104	20 68	40 104	**116**	396	100	**1.07**	3.64	109	1.11	2.54	**EN12900 LBP**
-10 14	45 113	20 68	45 113	**400**	1365	344	**1.81**	6.19	221	1.40	9.33	**EN12900 MBP**
5 41	50 122	20 68	50 122	**702**	2394	603	**2.31**	7.88	304	1.70	17.60	**EN12900 HBP**

Performance Tables

R134a, 230 V/60 Hz, CSIR, fan 3m/s

pc= 45/113 | RGT= 32/89.6 | Tliq= 45/113 | °C/°F

pe		Cooling capacity			COP	EER	P	I	ṁ
[°C]	[°F]	[W]	[Btu/h]	[kcal/h]	[W/W]	[Btu/Wh]	[W]	[A]	[kg/h]
-35	-31	**109**	373	94	**1.01**	3.46	108	1.11	2.35
-30	-22	**146**	496	125	**1.10**	3.75	132	1.16	3.14
-20	-4	**253**	862	217	**1.42**	4.85	178	1.27	5.48
-10	14	**414**	1414	356	**1.88**	6.40	221	1.40	9.05
0	32	**642**	2191	552	**2.42**	8.25	266	1.56	14.17
10	50	**946**	3228	814	**2.99**	10.21	316	1.74	21.18
15	59	**1130**	3855	972	**3.28**	11.19	345	1.84	25.53

pc= 55/131 | RGT= 32/89.6 | Tliq= 55/131 | °C/°F

-35	-31	**84**	288	73	**0.80**	2.74	105	1.10	2.00
-30	-22	**120**	410	103	**0.90**	3.05	134	1.16	2.86
-20	-4	**218**	746	188	**1.17**	3.97	188	1.30	5.22
-10	14	**361**	1231	310	**1.52**	5.18	238	1.46	8.70
0	32	**558**	1905	480	**1.94**	6.61	288	1.64	13.61
10	50	**821**	2802	706	**2.39**	8.15	344	1.85	20.35
15	59	**981**	3346	843	**2.62**	8.94	374	1.97	24.55