COMPRESSOR TECHNICAL DATA

NEU6212Z

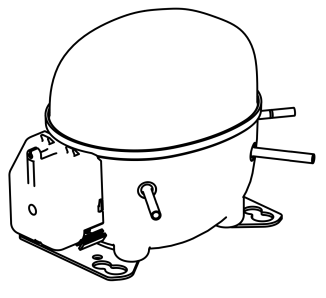

ENGINEERING CODE
269MB71

REFRIGERANT
R-134a

POWER SUPPLY
200-230 V 50 Hz/208-230 V 60 Hz

APPLICATION
HBP

STANDARD
ASHRAE

MOTOR TYPE
CSCR

COOLING CAPACITY
1472 W

EFFICIENCY
2.57 W/W

DATA

GENERAL DATA

Model	NEU6212Z
Type	Hermetic Reciprocating
Technology	ON/OFF
Compressor Application	HBP
Expansion Device	Capillary Tube or Expansion Valve
Compressor Cooling	Fan/200
HP	1/2
Starting Torque	HST
Plant	SLOVAKIA

ELECTRICAL DATA

Start Winding Resistance	10.9 Ω at 25°C
Run Winding Resistance	3.59 Ω at 25°C
Locked Rotor Amperage (LRA) 50Hz	26 A
Locked Rotor Amperage (LRA) 60Hz	26 A

MECHANICAL DATA

Displacement	14.28 cm^3
Oil Charge	350 ml
Oil Type	ESTER
Oil Viscosity	ISO22
Weight	11.6 Kg

ELECTRICAL COMPONENTS

Start Capacitor	108-130 µf/330 V
Run Capacitor	12.5 µf/400 V
CSR CSIR BOX	Yes
Starting Device Description	RVA3H3C-108
Overload Protection	MRA38173-3261

PERFORMANCE

TESTED CONDITIONS

Tested Refrigerant	R-134a
Tested Application	HBP
Tested Standard	ASHRAE
Tested Cooling	Fan
Tested Voltage	200 V
Tested Frequency	50 Hz
Refrigerant Temperature	Dew

RATED POINTS

Condensing Temperature °C	Evaporating Temperature °C	Cooling Capacity W	Efficiency W/W	Power Consumption W	Current A	Gas Flow Rate kg/h
54.4	7.2	1472	2.57	572	3.06	32.56

Test Condition: Subcooling 8.3 K, Return Gas 35 °C. Data generated in accordance to EN 12900:2013 polynomial equation and tolerance guidelines.

PERFORMANCE CURVE

Condensing Temperature 35°C

Evaporating Temperature °C	Cooling Capacity W	Efficiency W/W	Power Consumption W	Current A	Gas Flow Rate kg/h
-15	705	2.25	313	2.03	13.00
-10	895	2.59	346	2.13	16.57
-5	1119	2.91	384	2.25	20.80
0	1380	3.27	422	2.39	25.75
5	1679	3.70	454	2.56	31.51
10	2019	4.25	475	2.76	38.14

Test Condition: Subcooling 8.3 K, Return Gas 35 °C. Data generated in accordance to EN 12900:2013 polynomial equation and tolerance guidelines.

PERFORMANCE CURVE

Condensing Temperature 45ºC

Evaporating Temperature °C	Cooling Capacity W	Efficiency W/W	Power Consumption W	Current A	Gas Flow Rate kg/h
-15	622	1.81	343	2.10	12.40
-10	794	2.11	376	2.24	15.89
-5	999	2.38	420	2.39	20.06
0	1236	2.64	469	2.57	24.96
5	1511	2.92	518	2.77	30.68
10	1823	3.24	563	2.99	37.28

Test Condition: Subcooling 8.3 K, Return Gas 35 ºC. Data generated in accordance to EN 12900:2013 polynomial equation and tolerance guidelines.

PERFORMANCE CURVE

Condensing Temperature 55ºC

Evaporating Temperature °C	Cooling Capacity W	Efficiency W/W	Power Consumption W	Current A	Gas Flow Rate kg/h
-10	696	1.78	392	2.34	15.19
-5	879	2.02	434	2.53	19.26
0	1093	2.24	487	2.74	24.09
5	1340	2.45	546	2.97	29.74
10	1624	2.68	607	3.22	36.29

Test Condition: Subcooling 8.3 K, Return Gas 35 ºC. Data generated in accordance to EN 12900:2013 polynomial equation and tolerance guidelines.

ENVELOPE

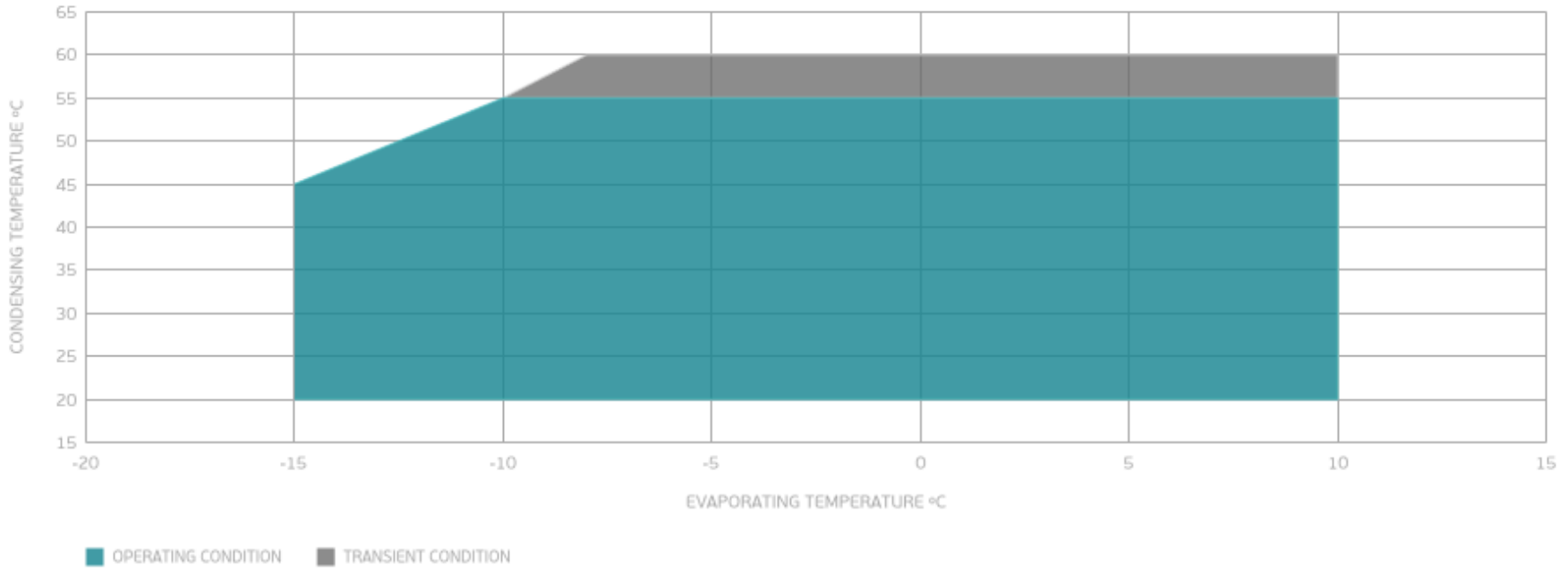

External

EXTERNAL CHARACTERISTICS

Base Plate	UNI
Tray Holder	NO

Connector	Internal Diameter	Shape	Material
Suction	8.1 mm	SLANTED 42°	COPPER
Discharge	6.45 mm	STRAIGHT	COPPER
Process	6.45 mm	SLANTED 42°	COPPER

EXTERNAL DIMENSIONS

SHELL

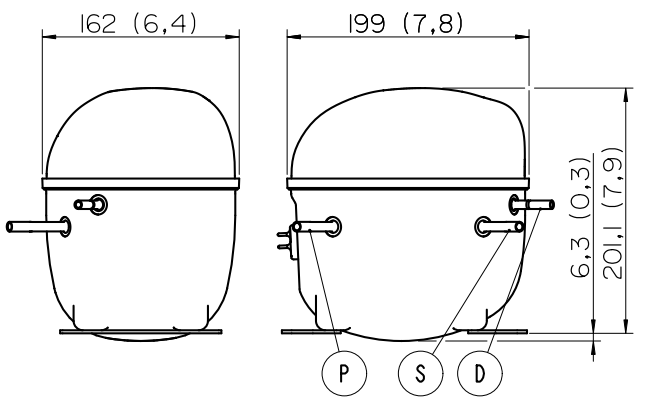

BASE

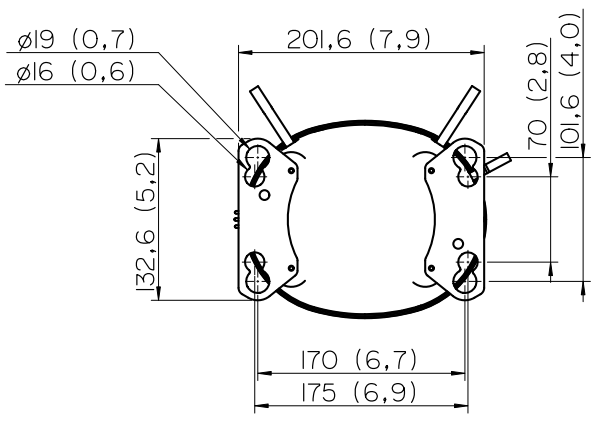

FENCE